Data Sheet

LS600 Subwoofer

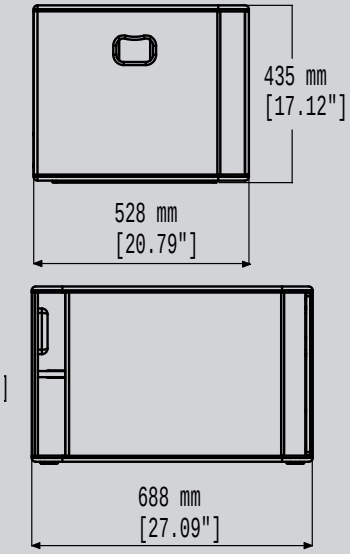

A high power system capable of producing 138 dB Peak SPL, the new LS600 Sub-Bass extends the usable range of the PS10-R2 Loudspeaker to 38Hz, providing exceptional performance and high power output in an extremely compact, light weight package.

The PS10 TDController-R2's integral sub section and combined signal (PS10-R2 and LS600) Speakon wiring ensure cost effective and simple system implementation. One LS600 is typically used with two PS10-R2 loudspeakers, additional units may be used for an enhanced effect.

Key Features

- High-power system (138dB Peak SPL @ 1m) with 15in VLF long excursion driver.
- VLF extension (to 38Hz) of PS10-R2 Loudspeakers.
- Sophisticated control electronics ensure reliable, linear operation.
- Integral pole mount that supports one or two PS10-R2 Loudspeakers.

System Applications

- Touring, installed PA for clubs, A/V, theatre, broadcast, Houses of Worship, etc. High-quality stage monitoring for cabarets A/V, theatre, broadcast, etc.
- Fill-in system for use with larger NEXO PS/Alpha systems, or any application needing exceptional side, down and near-field augmentation.

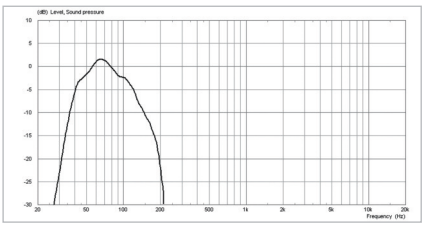

LS600 response

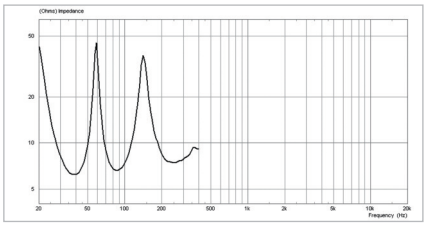

LS600 impedance

www.nexo.fr

Specifications

LS600 Subwoofer

LS600 PRODUCT FEATURES

Components:	LF 1 x 15" (38cm) long excursion Neodymium 8Ω driver.
Height x Width x Depth	435mm x 688mm x 528 mm (17.12" x 27.09" x 20.79").
Weight	30 kg (66 Lbs) net.
Connectors	2 x NL4MP SPEAKON 4 pole.
Construction	Baltic Birch Ply & textured, polyurethane black coating.
Fittings	Handles 2 Metal recessed pockets.
Flying Points	One plate connecting with external accessories.
Stand fittings	Internal Steel Stand Fitting on Top (35mm, 1 3/8") allows pole mounting for 1 PS10-R2.

SYSTEM SPECIFICATIONS LS600 with PS10 TDController-R2

Frequency Response [a]	40 Hz - 110 Hz ±3dB.
Usable Range @-6dB [a]	38 Hz - 120 Hz.
Sensitivity 1W @ 1m [b]	101 dB SPL Nominal.
Nominal Peak SPL @ 1m [b]	135 to 138 dB Peak.
Crossover Frequencies	120 Hz Active through PS10 TD Controller-R2.
Nominal Impedance	8 Ohms.
Recommended Amplifiers	1000 to 2000 Watts / 8 Ohms.

SYSTEM OPERATION

Electronic Controller	The LS600 Subwoofer must be used with a Nexo Controller (PS10TD -R2, NX242, or NXAMPS). Use without a properly connected Controller will result in poor sound quality and may damage the components.
Subbass	The LS600 Subwoofer provides optional VLF extension for PS10R2 Loudspeakers. Active two-way operation with the PS10-R2 is included in the PS10TD-R2, NX242 or NXAMPS. One LS600 matches 2 x PS10-R2, additional LS600 may be used for enhanced effect.
Speaker Cables	The PS10R2 is wired 2- & 2+ on Speakon connectors, LS600 on 1- & 1+. Loop through Speakons are present on both products. Single identical cables can thus be used to loop through combinations of up to 2 x PS10R2 & 1 x LS600 in no particular order. As part of a policy of continual improvement, NEXO reserves the right to change specifications without notice.

SHIPPING & ORDERING

Packaging	LS600 is packaged as a single product.
Shipping Weight & Volume	29.4 kg (64.68 lbs) / 0.265 cubic metres.

As part of a policy of continual improvement, NEXO reserves the right to change specifications without notice.
[a] Response curves & data : Anechoic Far Field for the PS10-R2 + PS10TDController-R2. Half-Space Anechoic radiation for the LS600 + PS10 TDController-R2.
[b] Sensitivity & Peak SPL data : these will depend on spectral distribution and crest factor of program material. Measured with band limited Pink Noise.
Nominal refers to Voice Decade (300 Hz - 3 kHz), Wideband to the specified ±3dB range. Data are for speaker + processor + recommended amplifier combinations.
Peak SPL is at clipping of recommended amplifier.
[c] Directivity curves & data : obtained by computer treatment on off axis response curves.
E&OE September 2009.

Architectural and Engineering Specifications

The sub-bass loudspeaker system shall have one 15in VLF long excursion cone transducer. Nominal Sensitivity shall be 101dB. When driven by a NEXO NXAMP 4x1, NXAMP 4x4 a PS10 TDController-R2 or by a NX242 properly-connected to amplification capable of delivering 1000 to 2000 Watts into a 4Ω (nominal) load the system shall be capable of 135dB to 138dB peak SPL, with a frequency response of 40Hz to 110Hz ±3dB (38Hz to 120kHz ±6dB). The system shall include an active crossover. Electrical connections shall be made via two 4-pole NL4MP SPEAKON connectors.

The system shall have a tuned ported rectangular enclosure constructed of 18ply Baltic birch, finished in structured black coating and having exterior dimensions no greater than 430mm H x 689mm W x 528mm D (16.9in H x 27.1in W x 20.8in D): the system shall weigh 33.0kg (73.9lbs). Exterior hardware shall include 1 metal plate, 2 attachment points and 1-pole socket. Interior components shall be protected by a powder coated perforated steel grille. The system shall be the NEXO LS 600 with either the PS10 TDController-R2, NXAMP 4x1, NXAMP 4x4 or NX242.

NEXO is one of the world's leading sound reinforcement loudspeaker manufacturers. Founded in 1979, the company is dedicated to crafting practical solutions with solid engineering. Each new design begins with a proprietary sophisticated computer simulation process that allows every parameter to be extensively modeled and simulated, leading to breakthrough cost and performance gains. NEXO's comprehensive product line includes loudspeakers, analogue and digital control electronics and amplification; all designed to deliver consistent sound quality and long term reliability for a broad range of applications.

NEXO S.A.
Parc d'Activité
du Pré de la Dame Jeanne
B.P. 5
60128 PLAILLY
Tel: +33 (0) 3 44 99 00 70
Fax: +33 (0) 3 44 99 00 30
e-mail: info@nexo.fr

NEXO LatAM
C.C. No 33. Suc 49
Caballito (1449)
Buenos Aires
Argentina
Tel: +54 114 432 1911
Fax: +54 114 431 1007
e-mail: info@nexo.fr

NEXO Asia
GPO Box 806
Hong Kong
SAR China
Tel: +852 9096 3472
Fax: +852 2104 3214
e-mail: info@nexo.fr

www.nexo.fr

LIMITED WARRANTY
NEXO loudspeakers and electronics are covered against defects in workmanship or materials for a period of two (2) years from the original date of purchase. At the option of NEXO the defective item will be repaired/replaced with no charge for materials/labour. The item is to be adequately packaged and dispatched, pre-paid, to a NEXO authorised distributor/service centre. Unauthorised repair shall void the warranty. The NEXO warranty does not cover cosmetics or finish and does not apply to any items which in NEXO's opinion have failed due to used abuse, accidents, modifications or any type of misuse. All images and text herein are the property of NEXO SA, and deemed accurate, although specifications are subject to change without notice.